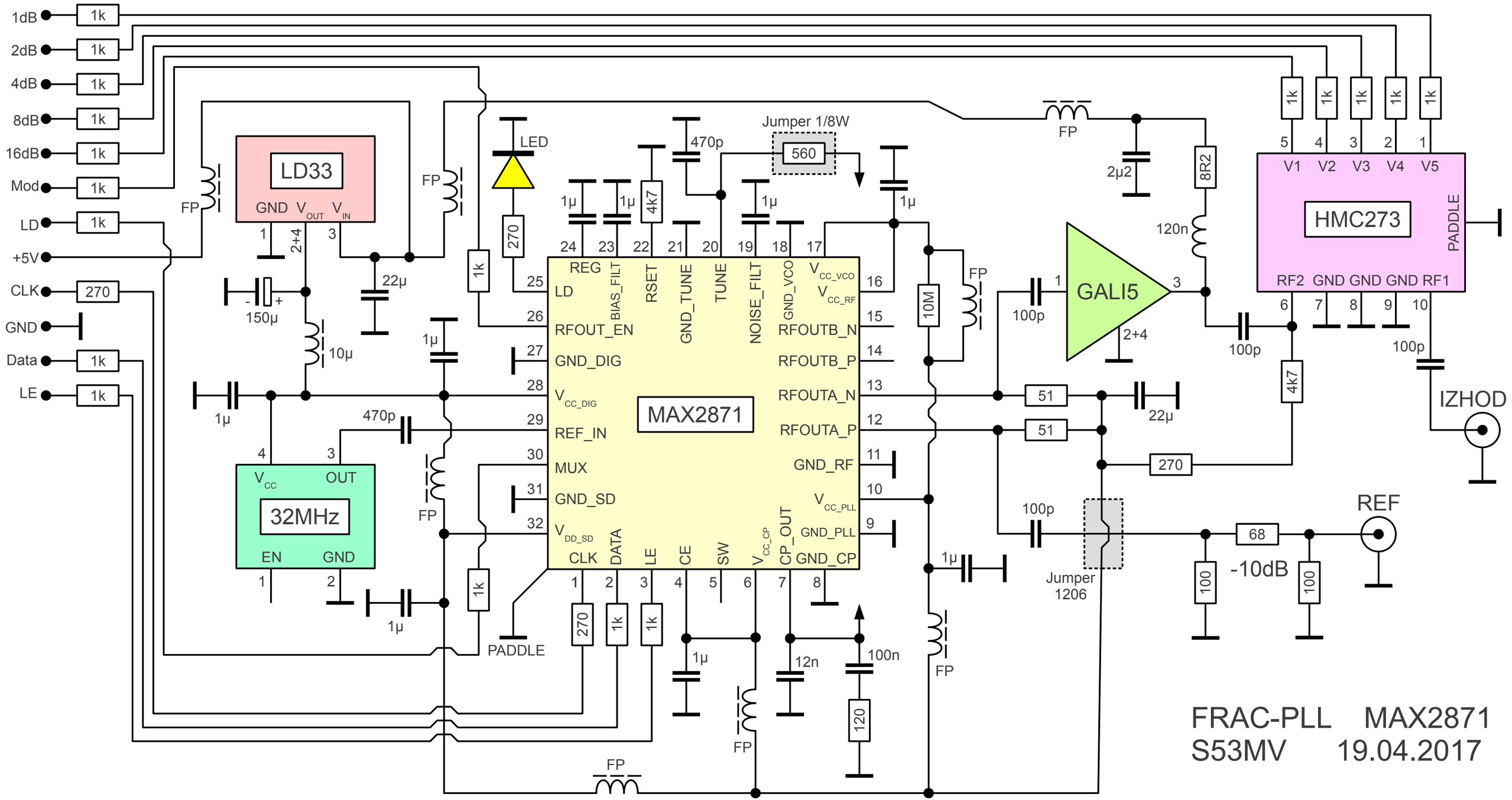
1dB
2dB
4dB
8dB
16dB
Mod
LD
+5V
CLK
GND
Data
LE
1k
270
LD33
GND
V_{OUT}
V_{IN}
2+4
150µ
10µ
22µ
FP
LED
470p
Jumper 1/8W
560
1µ
4k7
10M
2µ2
8R2
120n
100p
GALI5
HMC273
V1
V2
V3
V4
V5
PADDLE
RF2
GND
RF1
IZHOD
51
22µ
MAX2871
REG
LD
RFOUT_EN
GND_DIG
V_{CC_DIG}
REF_IN
MUX
GND_SD
V_{DD_SD}
CLK
DATA
LE
CE
SW
V_{CC_CP}
CP_OUT
GND_CP
GND_PLL
V_{CC_PLL}
GND_RF
RFOUTA_P
RFOUTA_N
RFOUTB_P
RFOUTB_N
V_{CC_RF}
V_{CC_VCO}
GND_VCO
NOISE_FILT
TUNE
GND_TUNE
RSET
BIAS_FILT
32MHz
V_{CC}
OUT
EN
12n
100n
120
Jumper
1206
68
-10dB
100
REF
FRAC-PLL MAX2871
S53MV 19.04.2017