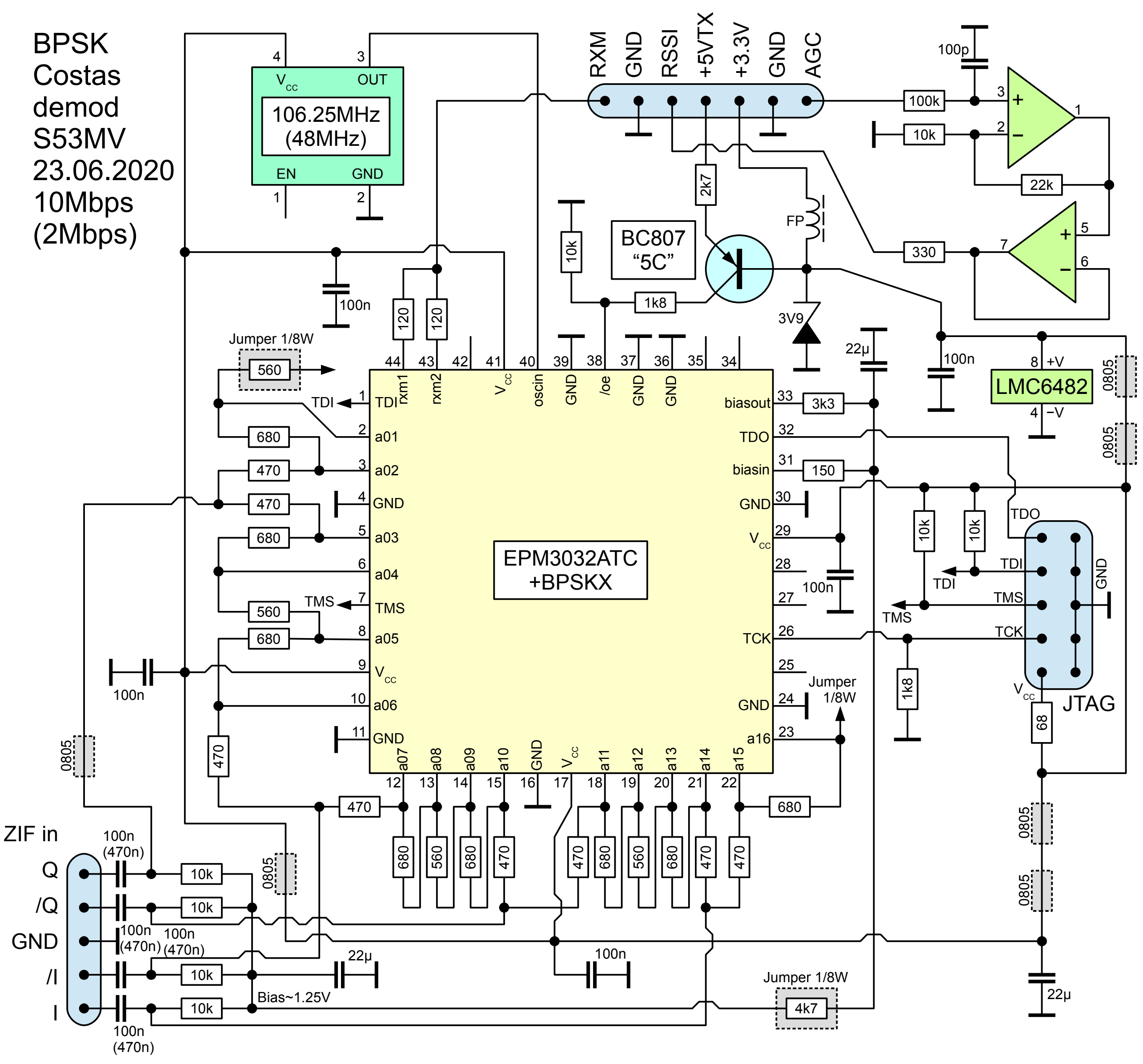
BPSK
Costas
demod
S53MV
23.06.2020
10Mbps
(2Mbps)
106.25MHz
(48MHz)
Vcc
OUT
EN
GND
RXM
GND
RSSI
+5VTX
+3.3V
GND
AGC
100p
100k
10k
22k
330
2k7
FP
BC807
"5C"
10k
1k8
3V9
22µ
100n
LMC6482
+V
−V
0805
Jumper 1/8W
560
680
470
120
EPM3032ATC
+BPSKX
TDI
TMS
TCK
TDO
biasout
biasin
3k3
150
Vcc
GND
a01
a02
a03
a04
a05
a06
a07
a08
a09
a10
a11
a12
a13
a14
a15
a16
rxm1
rxm2
oscin
/oe
JTAG
68
1k8
4k7
ZIF in
Q
/Q
GND
/I
I
100n
(470n)
10k
Bias~1.25V